YOSHIMURA ASIA CO., LTD. PRODUCT INSTALLATION INSTRUCTION MANUAL

YAMAHA EXCITER 150 SS FULL SYSTEM GP-MAGNUM

Be sure to read the instruction carefully before starting the work. It is necessary to follow the contents to install Yoshimura product.

CAUTION Before beginning installation, let motorcycle cool down.

CAUTION Be sure not to damage each part during installation.

CAUTION Torque specification must be followed. If neglected, it may cause bolt and nut to fall off and damage to Yoshimura product and motorcycle.

CAUTION Titanium Blue sleeve is colored by anodizing. Handle with care as the color may change. When cleaning silencer, use soft cloth with dish soap but do not use metal polish or chemical cleaner.

1. Product Information :

Description	YAMAHA EXCITER 150 Street Sports Full System GP-MAGNUM		Cyclone Type	Y367SCI11
Part Number	Stainless Sleeve (SS)	: 180A-367-5U50	Main Material	Stainless steel
	Titanium Sleeve (ST)	: 180A-367-5U80	Weight [STD : 4.9kg]	(SS) : 2.64kg
	Titanium Blue Sleeve (STB)	: 180A-367-5U80B		(ST) & (STB) : 2.52kg

2. Applicable Model :

Model	YAMAHA EXCITER 150

3. Contents:

No.	Descriptions	Part No.	Q'ty	No.	Descriptions	Part No.	Q'ty
1	Exhaust Pipe	1T1-367-5U00	1	5	Washer M6x13	812-206-1310	2
2	Silencer Assy Stainless Sleeve	186-367-5U50	1	6	Flange Nut M6	823-006-1000	2
	Silencer Assy Titanium Sleeve	186-367-5U80		7	Exhaust Spring	118-001-0000	2
	Silencer Assy Titanium Blue Sleeve	186-367-5U80B		8	Cap Bolt M8x45	800-208-5045	1
3	Silencer Bracket	161-366-0200-01	1	9	AL Collar 8-26-5	850-008-2605	1
4	Button Bolt M6x20	803-206-4020	2				

Parts Diagram

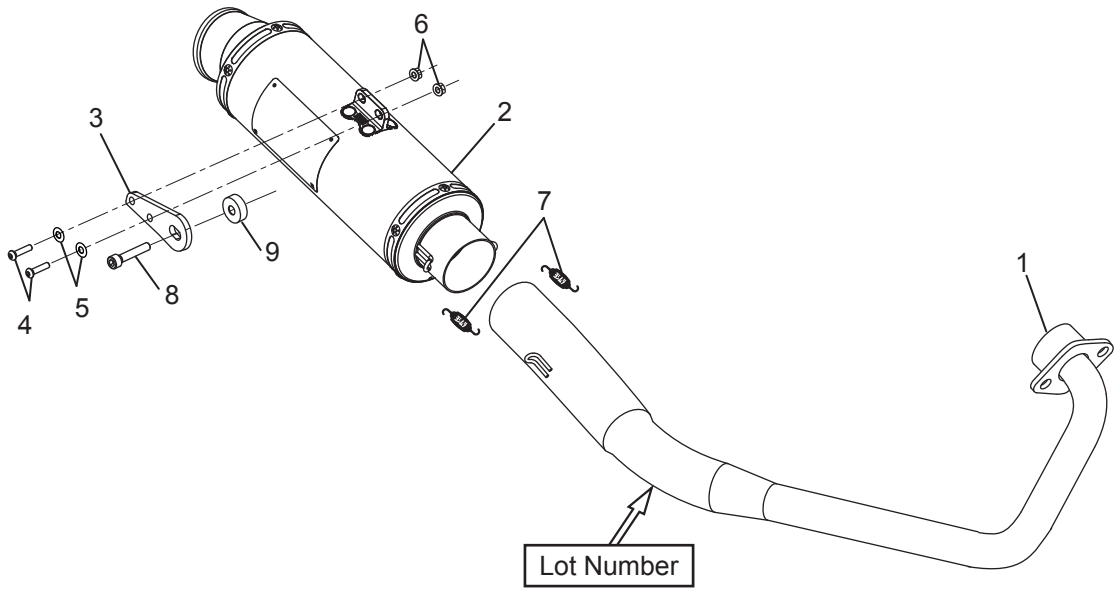

4. Installation steps:

1) Check all the component parts are in hand.

2) According to YAMAHA service manual, remove side and under fairings (See Fig.1).

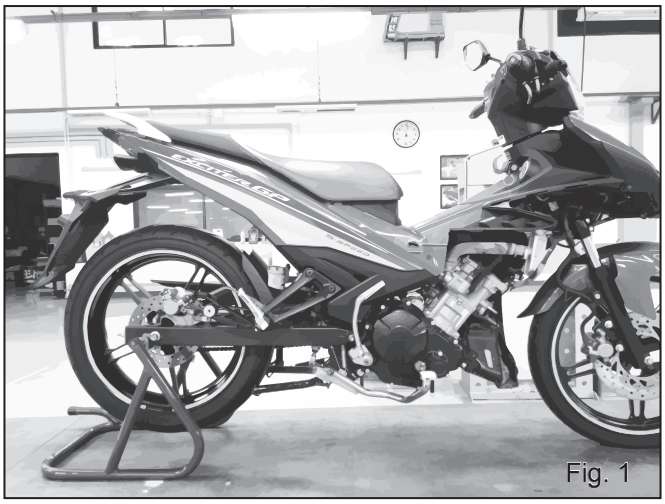
Fig. 1

3) Remove Exhaust guard and Footrest (See Fig.2 & 3).

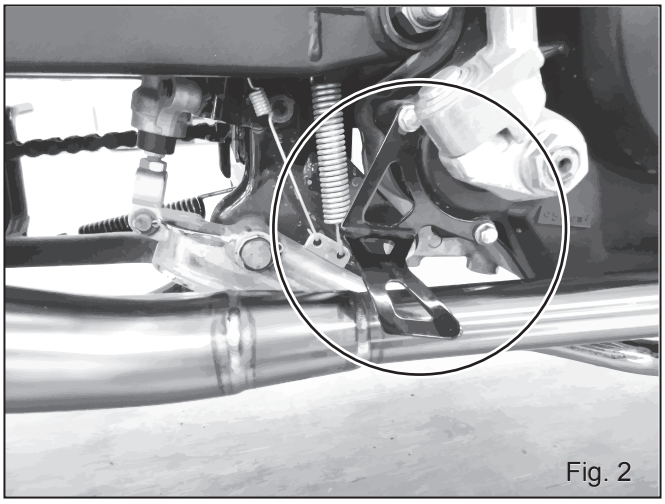
Fig. 2

4) Then, remove stock exhaust system from vehicle. (See Fig. 1)

⚠CAUTION When removing stock exhaust system, be careful not to damage frame and other components.

REFERENCE Stock bolts, washer and nut removed at this stage are reused when mounting Yoshimura exhaust system.

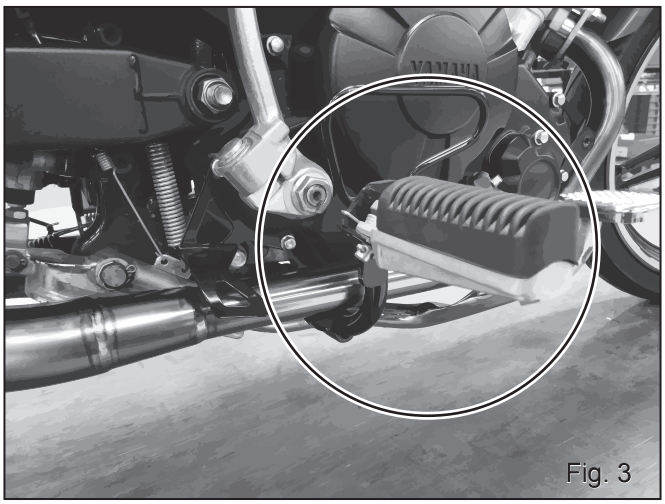
Fig. 3

5) Insert YAMAHA genuine new exhaust gasket on exhaust port. Then, insert Exhaust Pipe into exhaust port and fix it with stock bolts (See Fig. 4 & 5). Tighten bolts by hand only at this stage.

⚠CAUTION Use YAMAHA genuine new gasket.

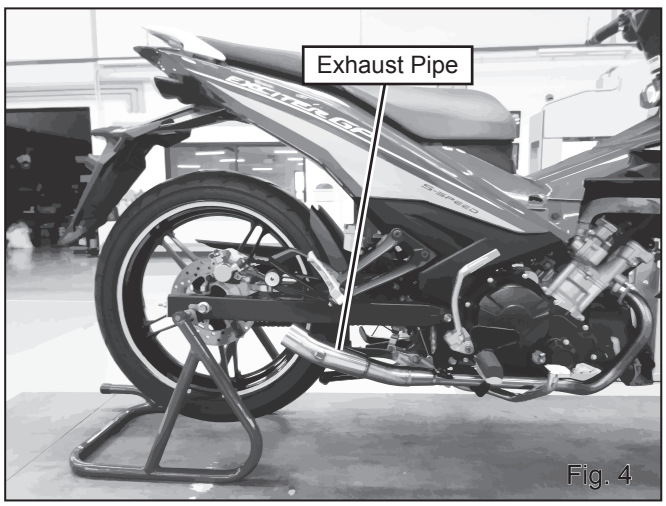

Fig. 4

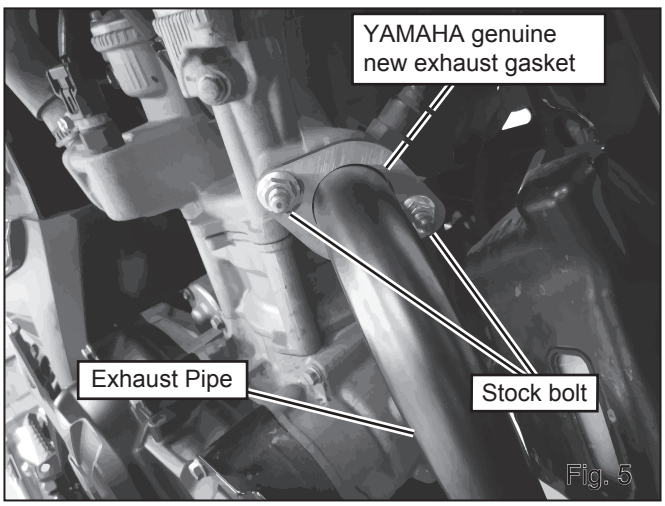

Fig. 5

6) Mount Silencer Bracket on Silencer Assy with 2 of each Button Bolt M6x20, Washer M6x13 and Flange Nut M6 (See Fig. 6 & 7). Tighten bolts by hand only at this stage.

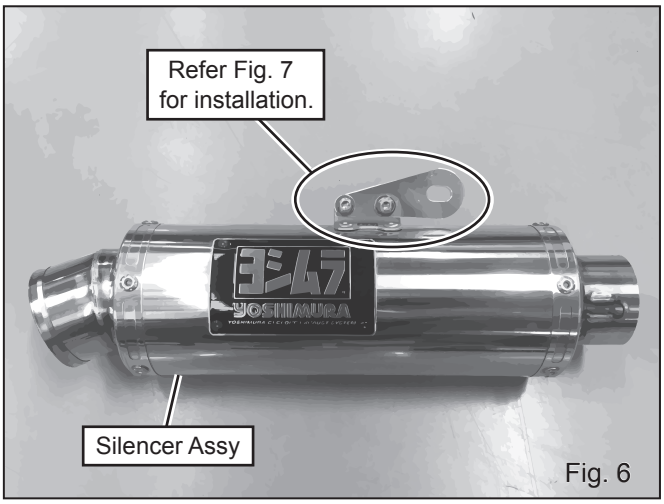

Fig. 6

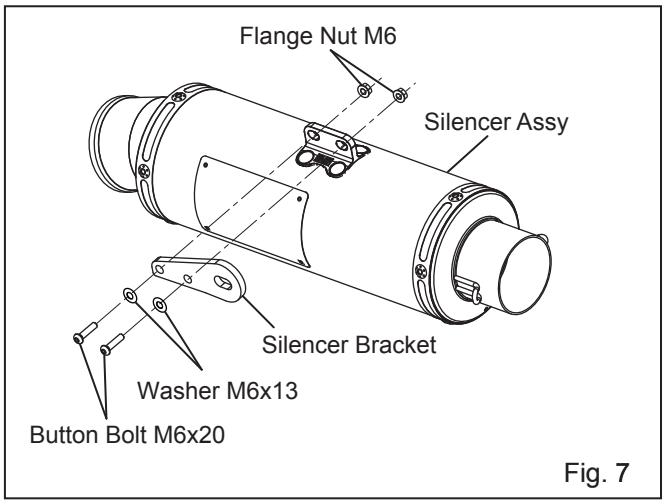

Fig. 7

7) Install Silencer Assy to Exhaust Pipe. Then, fix them with 2 of Exhaust Spring (See Fig. 8 & 9).

⚠CAUTION Make sure that exhaust spring is hooked to spring installation tool firmly. If neglected, it may cause injury.

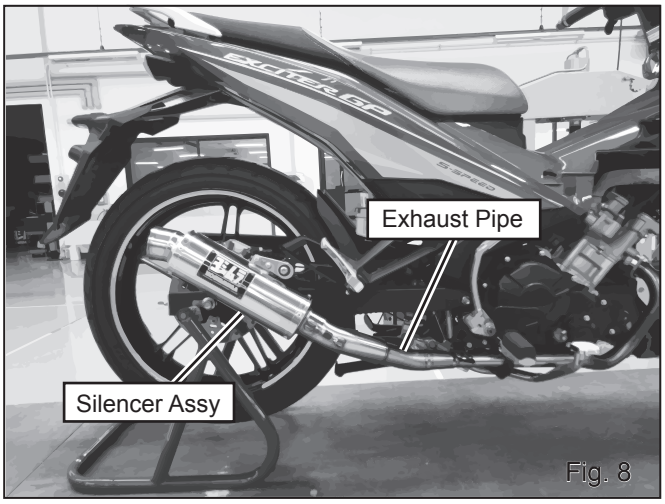

Fig. 8

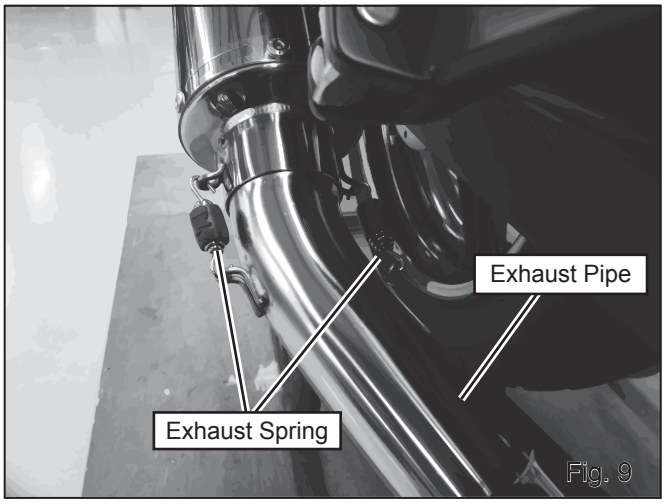

Fig. 9

8) Then, mount Silencer bracket to Stock silencer bracket with Cap bolt M8x45, AL Collar 8-26-5, Stock washer and Stock nut (See Fig. 10 & 11). Tighten bolt by hand only at this stage.

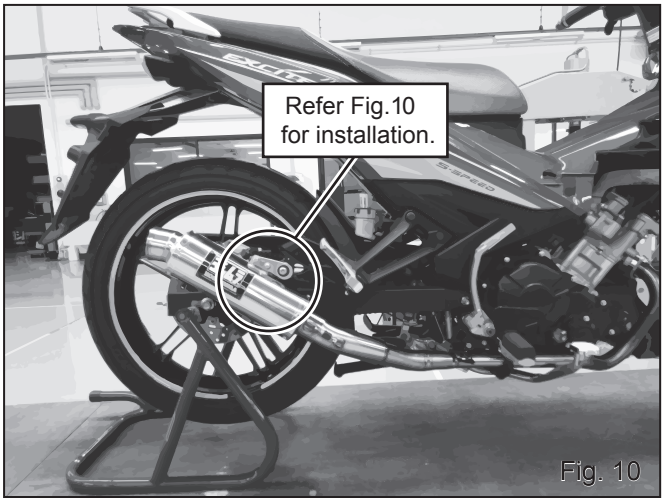

Fig. 10

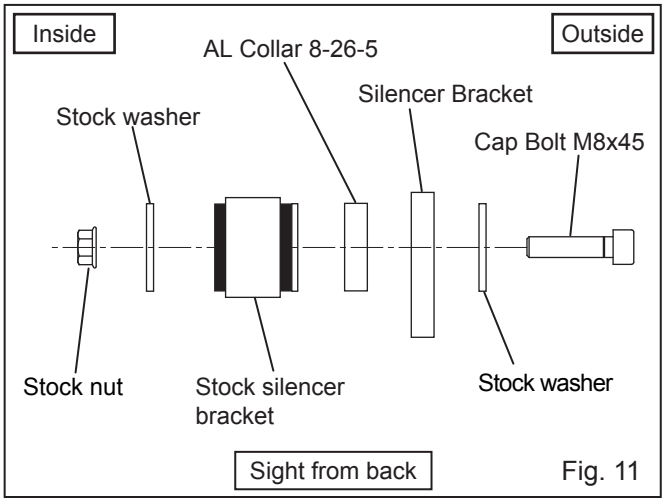

Fig. 11

9) Check that there are proper clearances between Yoshimura exhaust system and other components. Then, tighten and torque stock bolts on Flange and Button bolt M6x20, Flange nut M6, Cap bolt M8x45, Stock Nut on Silencer Stay (See Fig. 12 & 13).

Tightening Torque

Stock Bolts (Exhaust Pipe: exhaust port)	: 15 Nm
Cap Bolt M8x45 (Silencer Bracket)	: 23 Nm
Button Bolt M6x20 (Silencer Bracket)	: 10 Nm

CAUTION Torque specification must be followed.

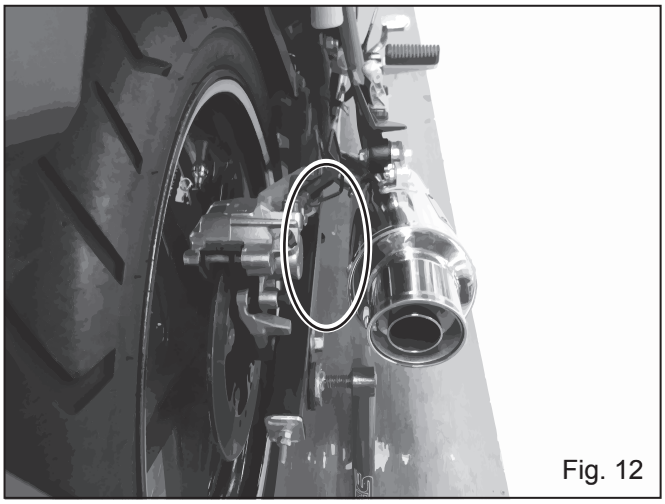
Fig. 12

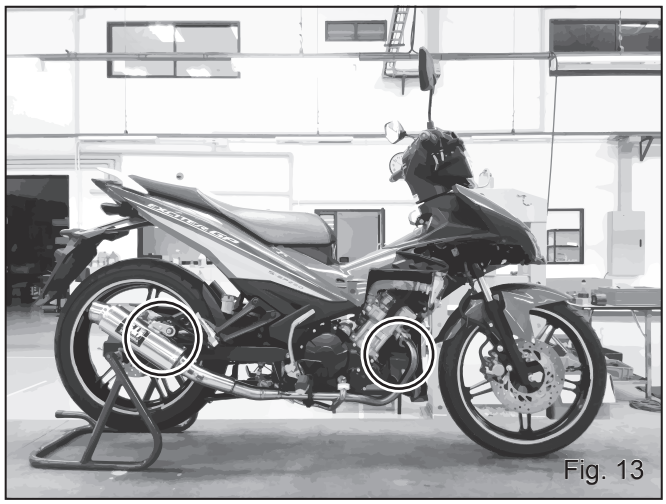
Fig. 13

10) Make sure there are proper clearances between Yoshimura exhaust system and other components. In case there is not enough clearance, loosen bolts and readjust the position of Yoshimura exhaust system.

11) It is recommended that whole Yoshimura exhaust system is wiped down with dish soap to remove oil and fingerprints. This will prevent tarnishing of finish after the exhaust system is heated up.

CAUTION When cleaning silencer, use soft cloth with dish soap. Do not use metal polish or paste cleaner If neglect, the paint of Emblem may come off or Titanium Blue color may tarnish.

12) Warm-up engine, and inspect the exhaust leakage. Tighten all bolts further after engine is cooled down.

CAUTION Before beginning the work, let motorcycle cool down.

REFERENCE It is normal for new silencer to smoke until inside oil residue burns off.

13) Re-mount side fairings, under fairings, Exhaust Guard and Footrest.

After Installation

Fig. 14

⚠ CAUTION

After install the Muffler please check Brake pedal. If Brake pedal hit or near to the Exhaust pipe. (See Fig.15 & 16)

Fig. 15

Fig. 16

Please Bending Brake Pedal (Bending by Hand) for make gap same picture (See Fig. 17 & 18)

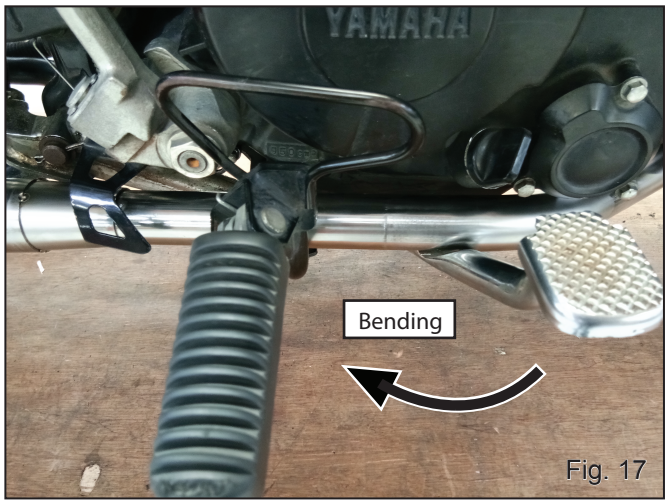

Fig. 17

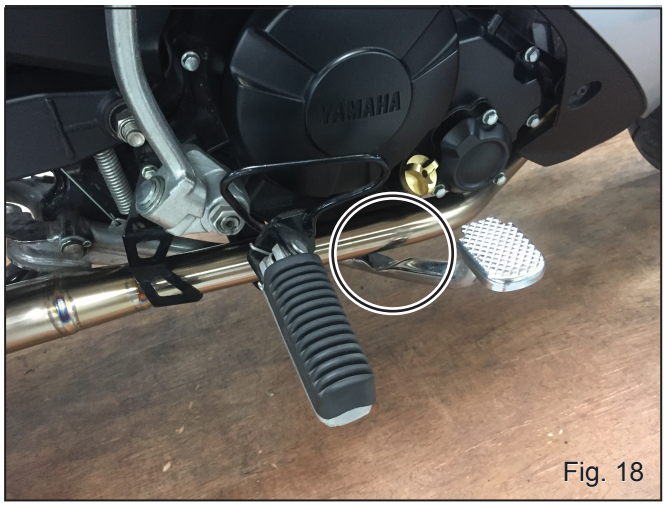

Fig. 18

⚠ CAUTION

After the engine is off at first time. There will be smoke out the end of the exhaust and The smoke will gradually reduce untill the depleted when the engine is off in the next. This smoke is normal with new exhaust (No problem).

⚠ CAUTION

Titanium Blue sleeve is colored by anodizing. Handle with care as the color may change. When cleaning silencer, use soft cloth with dish soap but do not use metal polish or chemical cleaner.

⚠ CAUTION

This exhaust is produced for street use only. In case that it is used on race circuit or tested on chassis dynometer, any damage or carbon discoloration is not included in warranty.

REFERENCE

Yoshimura Asia recommends silencer inner wool replacement every 5,000km (3,000miles) in order to get Yoshimura exhaust performance fully. Climate, riding condition, and frequency of ride are direct contributing factors for inner wool worn out. Keeping high engine revolution also promotes further wool consumption. For silencer repairing, please contact local Yoshimura distributor for further information.

- CAUTIONS AFTER INSTALLATION -

◎ Check each bolt sometimes to see that there is no failure condition such as poor tightening.
◎ Quality control is implemented on all products. If, however, any defect or failure is found, please notify Yoshimura Asia through the selling dealer. Necessary technical service or replacing of the product will be made.
◎ Due to improvement, the specifications and price of the product are subject to change without notice.
◎ For any information regarding this product, please address inquiries to Yoshimura Asia Co., Ltd.

Yoshimura Asia Co., Ltd.
118/3 Moo 18, KLONGNUENG, KLONGLUANG, PATHUMTHANI 12120, THAILAND
Web site: http://www.yoshimura.asia